HKD3212BF, 4014BF, 5020BF series

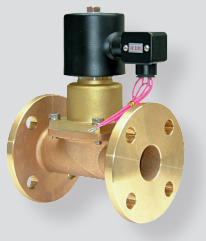

HKD 3212BF

Symbol

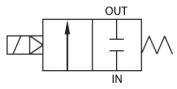

How to Order

HKD [3212] BF - [ ] - [AC220V]

① ② ③

① Orifice

	Orifice
3212	Ø32
4014	Ø40
5020	Ø50

② Seal material

	Material	Applications
Nil	NBR	(Standard)
M	FPM	Chemical, Hot water 140℃
E	EPDM	Hot water 100℃

③ Voltage

AC110V	AC110V 50Hz/60Hz
AC220V	AC220V 50Hz/60Hz
DC24V	DC24V

Specifications

Classification	Standard	Option	Classification	Standard	Option
Fluid	Air, Water	Steam, High temperature water	Voltage	AC110V 50Hz/60Hz AC220V 50Hz/60Hz DC24V	AC240V 50Hz/60Hz DC12V
Fluid temp.	0 ~ 60℃	EPDM: 0~100℃ FPM: 0~140℃			
Ambient temp.	50℃ (Max.)				
Pressure range	0 ~ 10kgf/㎠ (0 ~ 1MPa)	0 ~ 3kgf/㎠ (0 ~ 0.3MPa)	Allowable voltage fluctuation	AC, DC : ±5%	
Coil insulation	Class B	Class H	Power consumption	AC: 30W, DC: 30W	
Electrical connection	Terminal box Lead wire G(PF)1/2		Seal material	Brass	
End connection	JIS 10K FF		Seal Material	NBR	EPDM FPM
Orifice	Refer to the table below		Weight	Refer to the table below	

※Not availabe in explosive atmoshpere.

Features

- Diaphragm kick type-Direct acting type
- Normally Closed type
- Differential pressure 0kgf/㎠ operation
- Fire resistant structure, Large capacity
- Terminal box type
- Seal material can be changed depending on fluid specifications.

Applications

- Humidifying device (FPMSeal)
- Industrial washer
- Boiler
- Vacuum packing machine
- Water purifier
- Sterilizer

Dimensions

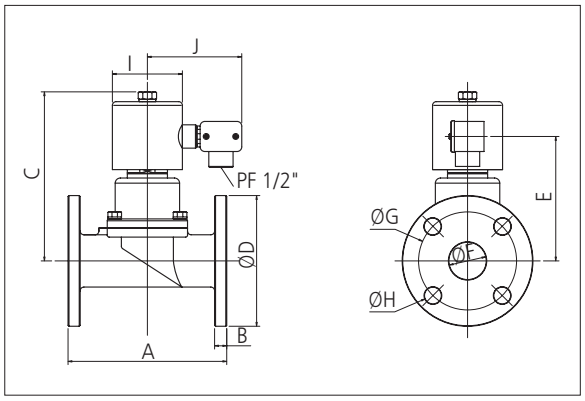

Model	A	B	C	D	E	F	G	H	I	J	Orifice	Weight (kg)
HKD 3212BF	170	13	151	ø135	113	ø35	ø100	ø18	75	102	ø32	7.1
HKD 4014BF	170	13	151	ø140	113	ø40	ø105	ø18	75	102	ø40	7.1
HKD 5020BF	180	14	156	ø155	119	ø50	ø120	ø18	75	102	ø50	8.8